MAXFORCE 40-40 GENERATOR

Product Description

GENERATOR COMBO, MAXFORCE 40-40, DOOSAN

Operation & Parts

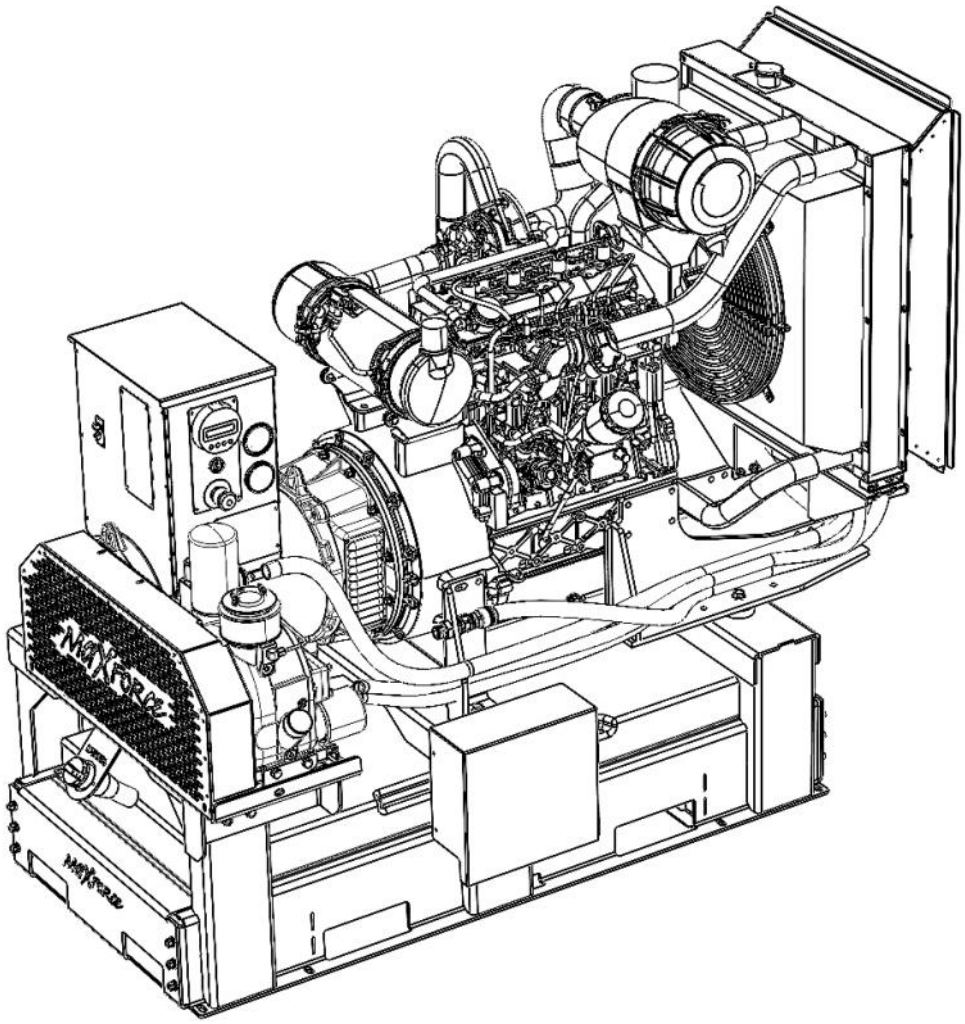

M90700-54-B

2845 W Service Rd Eagan, MN 55121

Table of Contents

General Information

Equipment Layout 3

Specifications 4

Safety 5

Equipment Hazards & Warnings 5

Operation

Pre Start-up Inspection 6

Starting Procedure 7

Shutdown Procedure 7

Controls Overview

Control Panel Layout 7

Controller Layout 8

Air Compressor

Operation 9

Adjusting Air Pressure 9

Maintenance

Engine Maintenance Table 10

Engine Replacement Parts 10

Air Compressor Maintenance Table 11

Air Compressor Replacement Parts 11

Troubleshooting 12

Technical Data

Generator Dimensions 16

Alternator Wiring Diagram 17

Parts 18

Warranty 25

For parts, service, and technical assistance, contact your equipment distributer:

Equipment Layout

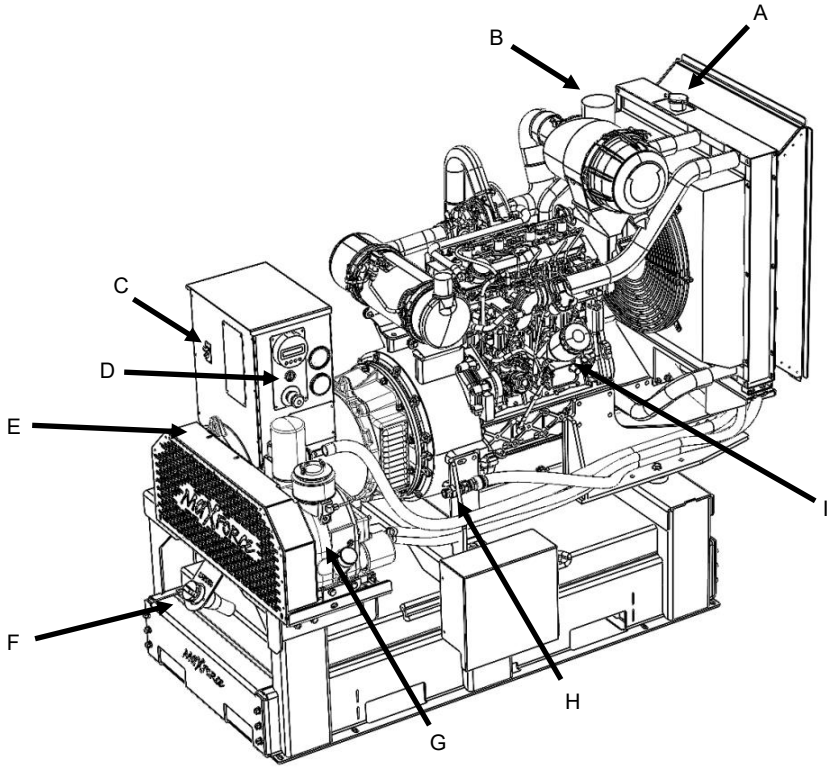

Generator Components	
A	Radiator Fill Cap
B	Engine Air Intake
C	Main Disconnect
D	Control Panel
E	Belt Guard
F	Fuel Fill
G	Air Compressor
H	Compressed Air Outlet
I	Engine Oil Filter
J	Engine Exhaust
K	Alternator
L	12V Battery
M	Fuel Tank

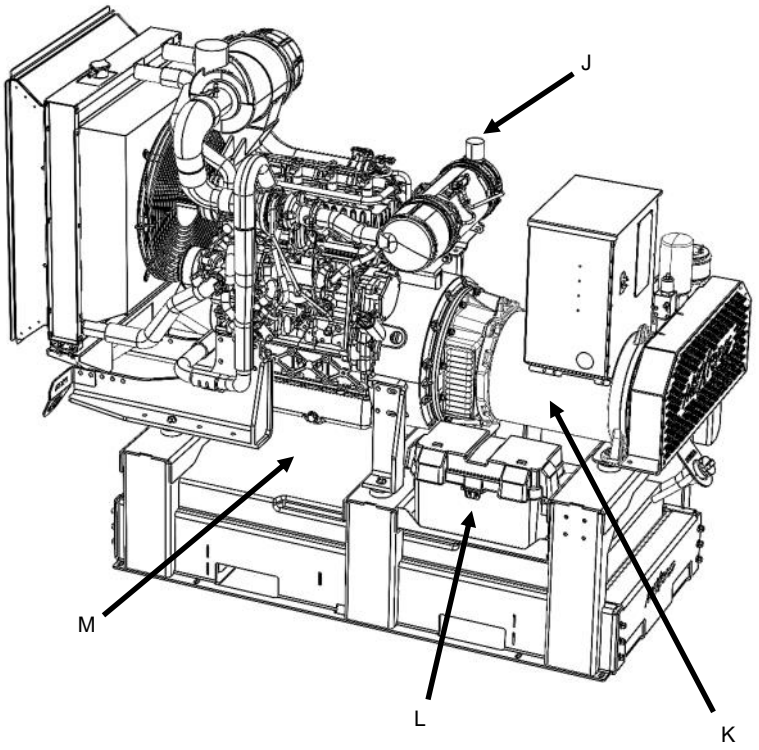

Specifications

Generator

Watts	40,000
Volts	220 V
Phase	Three
PF	0.8
Amps	134 A
Hertz	60 Hz

Engine

Model	Doosan D34
Starting System	12 Volt
Fuel	Diesel
Oil Type	Refer to engine manual
Oil Capacity	15 QTs
Coolant Type	Refer to engine manual

Alternator

Prime kVA	49
Leads	12
Voltage Regulator Type	AVR
Excitation System	Brushless
Efficiency	88.6% @ 0.8 PF

Air Compressor

Model	Rotorcomp NK31
Max Operating Pressure	218 PSI (165 PSI Safety Valve)
Max Flow Rate	42 CFM
Pressure Control Type	Pneumatic
Oil Capacity	3.4 QTs

Safety

General Safety Information

READ THE MANUAL

- Ensure any operator of this equipment has read and understands the manual before operating.
- Do not attempt to repair or modify this equipment without consulting the manual.

EQUIPMENT MISUSE HAZARD

- Equipment misuse can cause the equipment to rupture or malfunction and result in serious injury.
- This equipment is for professional use only.
- Read all instruction manuals, tags, and labels before operating the equipment.
- Use the equipment only for its intended purpose. If you are not sure, call your distributer.
- Do not alter or modify this equipment. Use only genuine OEM parts.
- Check equipment daily. Repair or replace worn or damaged parts immediately.
- Comply with all applicable local, state, and national fire, electrical, and safety regulations

FUEL HAZARD

- The fuel used in this unit is combustible and when spilled on a hot surface can ignite and cause a fire.
- Do not fill the fuel tank while the engine is running or hot.

EXHAUST HAZARD

- The exhaust contains poisonous carbon dioxide which is colorless and odorless.
- Do not operate this equipment in a closed building.

FIRE AND EXPLOSION HAZARD

- Improper grounding, poor ventilation, open flames or sparks can cause a hazardous condition and result in a fire or explosion and serious injury.
- Keep the generator area free of debris, including solvent, rags and uncontained fuel.

NOISE HAZARD

- Wear hearing protection when operating this equipment.

ELECTRICAL SHOCK HAZARD

- This equipment creates high voltage that can cause fatal electric shock.
- Do not attempt to service or repair the alternator while the engine is running.
- Be sure the equipment is properly grounded according to applicable national electrical code.

Equipment Hazards & Warnings

DANGER

- Hot oil under pressure – will cause severe injury or death. Do not remove valves, caps, plugs or piping while compressor is running or pressurized.
- Hot exhaust system. Allow system to cool down before attempting to preform maintenance on engine.
- Discharge air used for breathing will cause severe injury or death. Consult your generator dealer for additional filtration to meet OSHA standards.

WARNING

- Read the operators manual before starting this unit. Failure to adhere to instructions can result in severe personal injury.
- E-stop button should only be used in the case of an emergency.
- On shutdown, close compressed air vented ball valve
- Drive belts in rotation. Switch off engine and disconnect battery before attempting to work or perform maintenance on the compressor package.
- Hoses under pressure. Relieve system pressure before disconnecting or replacing air and oil hoses.

CAUTION

- To avoid electrical shock, disconnect battery prior to electrical system service
- High voltage present. Do not attempt to perform maintenance on alternator while engine is running.

Operation

Pre-Start Up Inspection

Before starting generator, check the oil level in the engine and air compressor. The oil level in the engine should be between the low and high marks on the engine oil dipstick (B-A). If the engine is low on oil, add oil to the engine at the oil cap. Check the oil on the oil dipstick again after filling to ensure it is at the proper level.

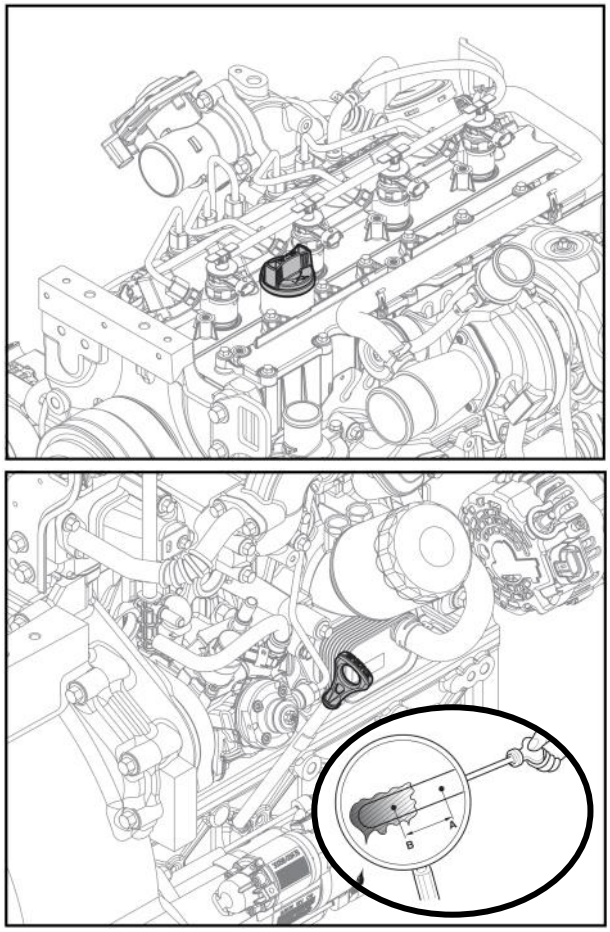

Engine oil fill level

The oil in the air compressor should come up to the bottom of the threads of the oil cap. If the air compressor oil is low, fill with screw compressor oil (S90700-38) until the oil reaches the bottom of the oil cap threads.

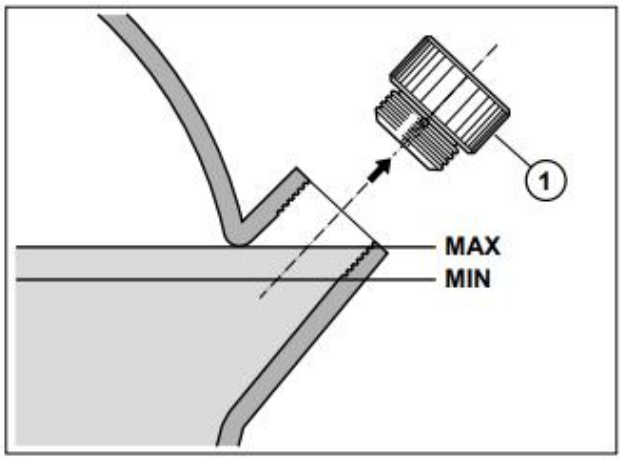

Air compressor oil fill level

Check the coolant level in the engine radiator. The coolant level should be visible once the radiator cap is removed.

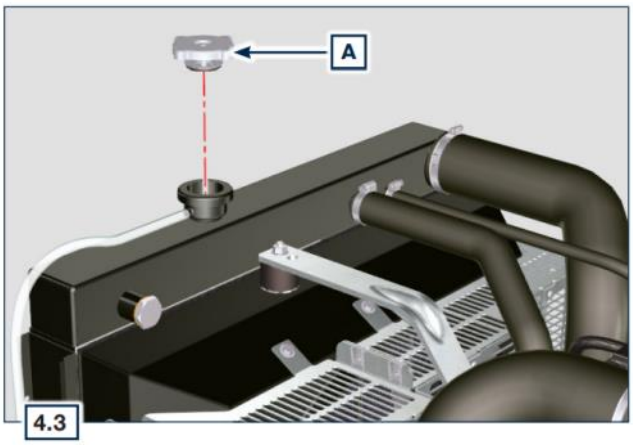

Radiator cap location

Visually inspect all hoses and belts for cracks or damage. Remove any tools, rags, or other material resting on the engine or air compressor. Verify the air compressor vented ball valve is in the closed position. Verify the main disconnect breaker is in the OFF position.

Starting Procedure

Start the engine using the key switch on the control panel. The digital display will indicate when the engine is OK to start after the glow plugs have warmed. The engine will automatically raise from idle speed to an operating speed of 1800 rpm. Allow engine to warm up 2-5 minutes before any load is applied. Open compressed air ball valve and switch the main disconnect breaker to the ON position.

Shutdown procedure

After shutting down electrical equipment, switch the main breaker to the OFF position. Close the compressed air vented ball valve to relieve downstream pressure. Allow the engine to idle for 1-2 minutes. Shut the engine down using the key switch.

NOTICE

On Shutdown

The red E-STOP pushbutton should only be used to shut down the generator in an emergency.

Control Panel Layout

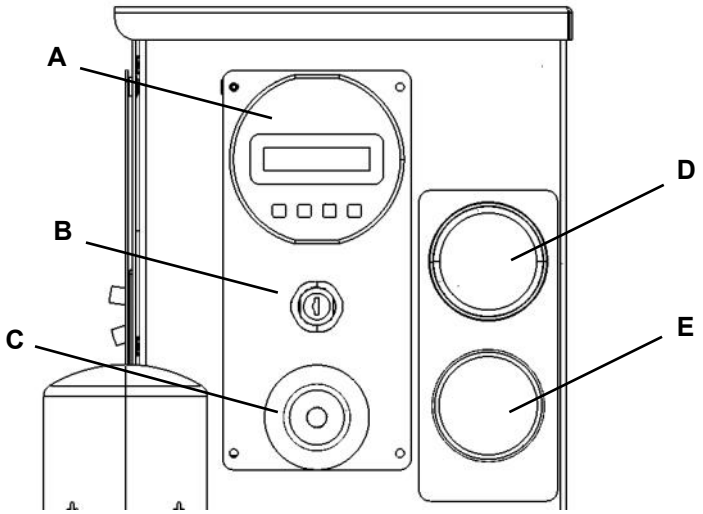

Control Panel Layout	
A	Controller
B	Key Switch
C	E-STOP
D	Air Pressure
E	Air Compressor Temperature

Controller Layout

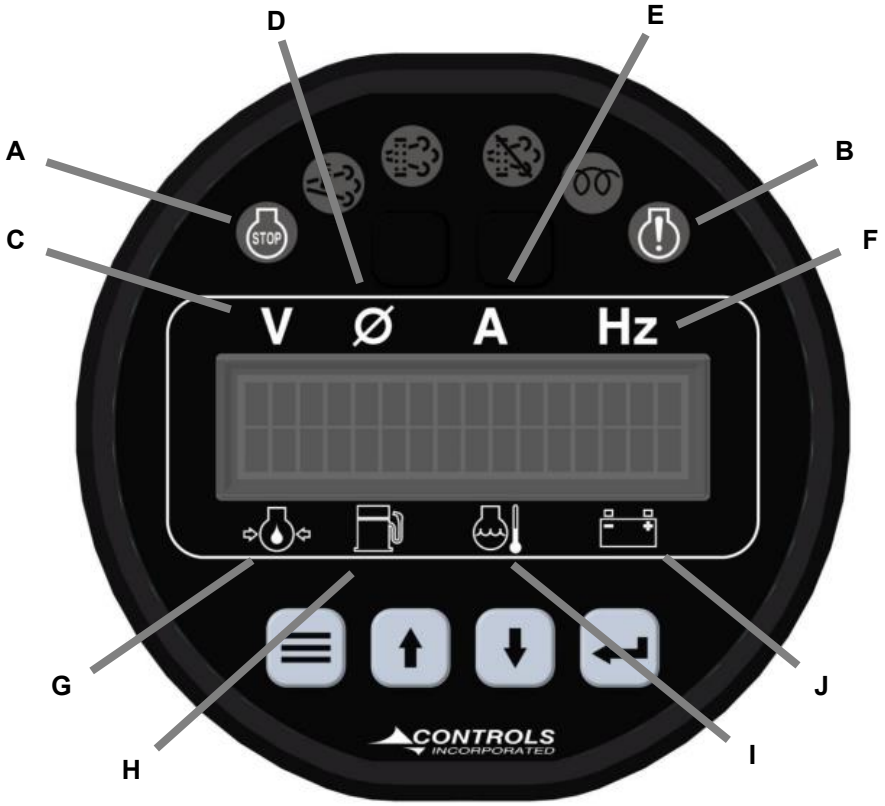

Controller Indicators	
A	Engine Shutdown Fault (Red)
B	Engine Warning Fault (Yellow)
C	Voltage On Displayed Phase
D	Current Phase Displayed
E	Amps On Displayed Phase
F	Generator Frequency
G	Engine Oil Pressure
H	Fuel Level
I	Engine Coolant Temperature
J	Battery Voltage

Air Compressor

Operation

This unit is equipped with a vented ball valve on the outlet of the air compressor package. This valve allows the flow of compressed air from the air compressor to be shut off while venting the downstream lines of air. Turn the ball valve to the open position to send compressed air downstream. Close the valve to unload the air compressor when compressed air is not in use.

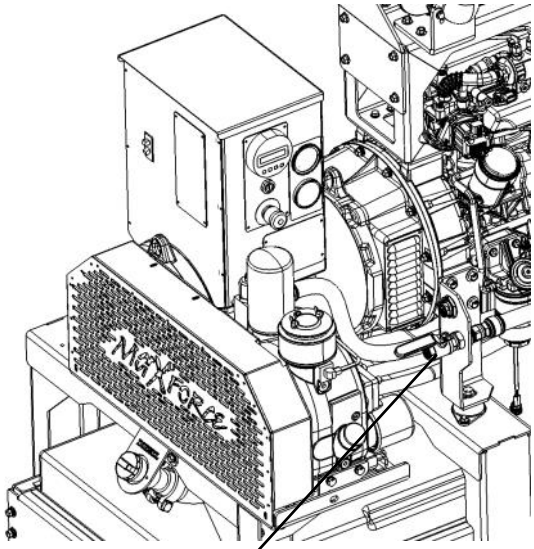

Adjusting air pressure

The air compressor has a pressure control knob located at the back of the unit. The pressure is set from the manufacturer at 125 psi and should not need to be adjusted. If it does need to be adjusted, turn clockwise to increase pressure and counterclockwise to reduce pressure. When adjusting pressure do not exceed 150 psi.

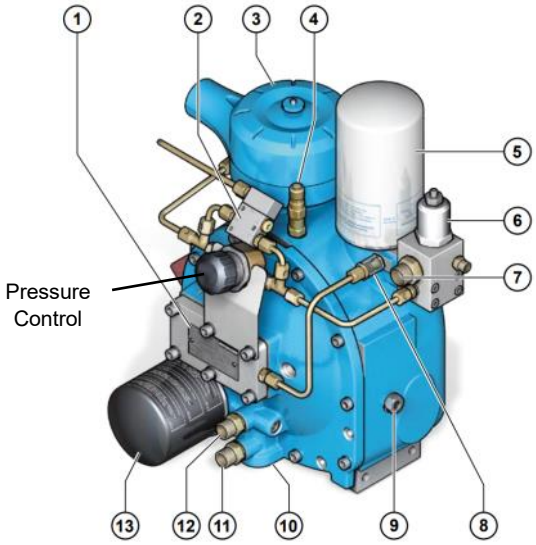

Air Compressor Components	
1	Nameplate
2	Control unit, pneumatic
3	Intake valve with intake filter unit
4	Safety valve
5	Separator cartridge
6	Minimum pressure valve
7	Compressed air outlet
8	Oil sight glass
9	Temperature probe connection
10	Oil-Thermostat
11	Oil circuit / outlet
12	Oil circuit / inlet
13	Oil filter

Please consult NK31 operators manual for additional information and maintenance instructions.

Maintenance

Engine Maintenance — Doosan D34

Item	Check	Replace	Replacement Part Number
Engine Oil	DAILY	500 Hrs.	SEE BELOW CHART
Engine Oil Filter	-	500 Hrs.	V90700-85
Engine Fuel Filter	500 Hrs.	500 Hrs.	V90700-86
Engine Air Filter (Primary)	100 Hrs.	500 Hrs.	V90700-87
Engine Air Filter (Secondary)	100 Hrs.	500 Hrs.	V90700-88

Maintenance Kits

Item	Kit Number
Doosan D34 Engine Maintenance Kit (Bi-Annual) Includes: 10W-30 oil, oil filter, air filter (primary and secondary), fuel filter	S90700-18

Recommended Oil		
Viscosity	SAE	15W-40 (-15° C ÷ +50° C) 10W-30 (-25° C ÷ +40° C) 10W-40 (-25° C ÷ +50° C) 5W-30 (-30° C ÷ +40° C) 0W-40 (-40° C ÷ +50° C)

Air Compressor Maintenance—NK31

Item	Check	Replace	Replacement Part Number
Air Compressor Oil	DAILY	12 Months	3.2 Quarts — S90700-38
Air Compressor Air Intake Filter	6 Months	12 Months	V90700-52
Air Compressor Oil Separating Filter	-	12 Months	V90700-50
Air Compressor Oil Filter	-	12 Months	V90700-51
Drive Belt	DAILY	-	V90700-24

Maintenance Kits

Item	Kit Number
NK31 Air Compressor Maintenance Kit (Annual) Includes: Oil, oil filter, air intake filter, oil separating filter	S90700-16

Belt Replacement/Maintenance

Belt should be visually inspected for wear and lack of tension daily. Belt may need to be periodically tensioned as the belt stretch during normal operations.

To access the belt, make sure the generator is shut down and the positive battery cable is disconnected form the battery. Remove the 4 screws that attach the belt guard shown below.

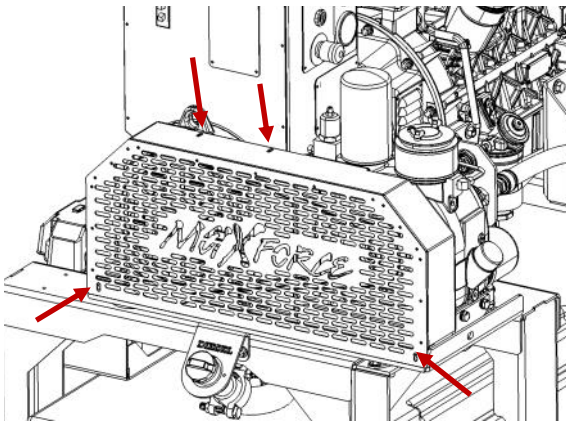

With the belt guard removed, check the belt tension along the topline of the belt. The required tension is 6.8—7.2 lbf at 0.25” deflection. Tension can be added by tightening the tension adjustment bolt shown below. Be sure to re-tighten the tension adjustment locknut if any adjustments are made. Re-install the belt guard before running the generator.

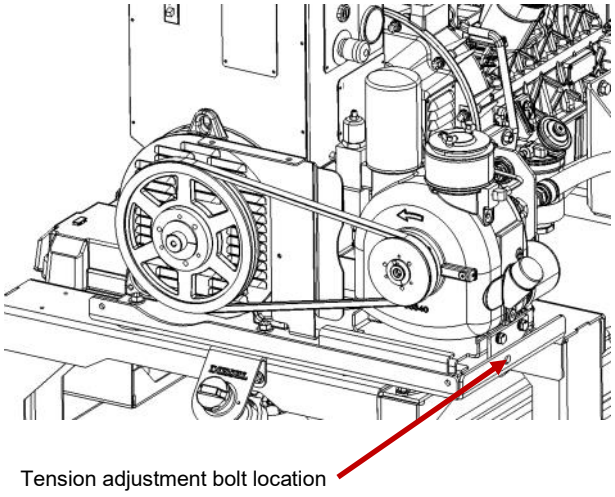

Troubleshooting

Engine

Problem	Cause	Solution
The engine does not start	Sulphated battery terminals corroded	Clean the battery terminals
	Battery voltage too low	Recharge or replace battery
	Low fuel level	Refuel
	Frozen fuel	Contact dealer
	Clogged fuel filter	Replace with a new filter
	Air suction in fuel system	Contact dealer
	Clogged air filter	Replace with a new filter
	Clogged pipes	Contact dealer
	Open fuse	Relace with a new fuse
	Intake or exhaust system clogged	Contact dealer
Engine doesn’t rev up	Safety protocol in starting	Wait some seconds
RPM instability at idle speed	Clogged fuel pipes	Contact dealer
Low idle speed	Clogged fuel pipes	Contact dealer
	Poor quality fuel	Clean the tank and refuel with quality fuel
Blue smoke	High oil sump level	Replace the engine oil
	Clogged air filter	Replace with a new filter
Excessive fuel consumption	Clogged air filter	Replace with a new filter
	High oil sump level	Replace the engine oil
Engine lost its initial performance	Clogged air filter	Replace with a new filter
	Clogged fuel pipes	Contact dealer
	Cheap fuel	Clean the tank and refuel with quality fuel
	High oil sump level	Replace the engine oil
Slow acceleration	Clogged fuel filter	Replace the fuel filter
Engine jerking	Clogged fuel pipes	Contact dealer
Engine overheats	Insufficient coolant level	Fill up to the level
	High oil sump level	Replace the engine oil
	Clogged radiator	Clean the radiator

Air compressor

Problem	Cause	Solution
System difficult to start	Motor output insufficient	Check
	Compressor is flooded with oil	Check
	System has not been discharged yet	Check
	Oil filling too viscous	Check viscosity
Differential pressure	Pressure in separator cartridge too high with clogged or full separator cartridge	Replace separator cartridge
Combistat switches off due to excessively high temperature	Oil shortage	Check oil level in oil reservoir and top up if necessary
	Oil filter soiled	Replace oil filter cartridge
	Thermostat defective	Replace thermostat
	Oil cooler soiled	Clean oil cooler on air side, clean on oil side if necessary
	Incorrect installation a) Room ventilation b) Exhaust air blocked c) Thermal short circuit	Observe recommendation on installing system
	Combistat faulty or incorrectly adjusted	Adjust combistat or replace
	Fan has failed	Check
Safety valve blows off	Safety valve defective	Replace safety valve
	Fine separator cartridge soiled	Replace cartridge
	System does not relieve Continuous operation	Contact dealer
	System does not switch off automatically (drop-out mode)	Contact dealer
Oil in compressed air	Oil extraction line with nozzle in oil sight glass soiled	Clean oil extraction system
	Fine separator cartridge defective	Check cartridge and replace if necessary
	Oil level in oil reservoir too high; possibly excessive condensate	Observe oil level marking; drain and replace if necessary
System is not discharged during continuous operation, system does not switch off automatically in case of intermittent operation, i.e. safety valve blows off	Upper switching point of network pressure monitor set too high	Readjust network pressure monitor
	Solenoid valve defective, relief valve defective	Replace solenoid valve/relief valve
	Minimum pressure valve jammed	Check minimum pressure valve for smooth move-ment; ensure smooth movement if necessary

Air compressor

Problem	Cause	Solution
System continually discharges, low feed quantity	Solenoid valve defective, relief valve defective	Replace solenoid valve/ relief valve
	Break in electric supply line to solenoid valve	Eliminate break
No or insufficient feed quantity	Intake filter soiled	Replace filter insert
	Oil shortage	Check oil level and top up if necessary
	Intake control valve does not open	Check control valve
	Leaks in system	Check, seal off
Control valve does not close	Pressure switch, or control valve	Check setting
Oil exits through intake control valve during stop	Sealing surface on intake control valve damaged, spring in intake control valve broken	Check parts and replace if necessary
System does not relieve	Solenoid valve/electrical system	Check
	Impulse-pressure relief valve	Check and replace parts if necessary
Control valve constantly discharges	Solenoid valve/electrical system	Check
Oil escapes during discharging (oil foam in fine separator cartridge)	Oil type incorrect	Oil change
	Oil foam forms during stop	Install discharge delay valve, replace with different nozzle diameter
	Oil level too high	Drain off oil

Alternator

Problem	Cause	Solution
NO VOLTAGE	Faulty AVR	Check the fuse Replace the AVR
	Faulty rectifier bridge and/or surge suppressor	Check rectifier bridge
	Faulty stator exciter	Contact dealer
	Main winding fault	Contact dealer
	Demagnetized machine	Contact dealer
	Broken connections	Check all connections
	Reference voltage is not set at desired value	Adjust voltage with potentiometer «V» on the AVR;

Problem	Cause	Solution
NO VOLTAGE	Under-frequency protection not properly adjusted	Check / adjust, the value of under-frequency protection for 50Hz (60Hz) nominal frequency.
LOW VOLTAGE	Engine speed low	Check the engine speed (voltage frequency)
	Faulty AVR	Replace the AVR
	Reference voltage is not set at desired value	Adjust voltage with potentiometer «V» on the AVR
	Sensing connection open circuit	Check the sensing connections
HIGH VOLTAGE	Faulty AVR	Replace the AVR
UNSTABLE VOLTAGE	AVR stability incorrectly set	Check the correct Dip switches position, adjust stability with ST trimmer
	Engine speed unstable	Check with the frequency meter if there are oscillations in engine speed
	Faulty AVR	Replace the AVR

Technical Data

Generator Dimensions

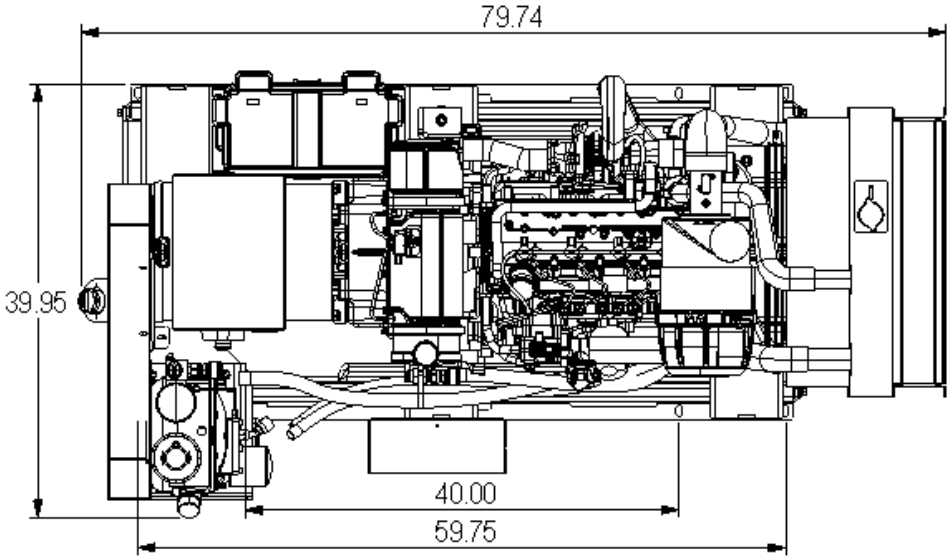

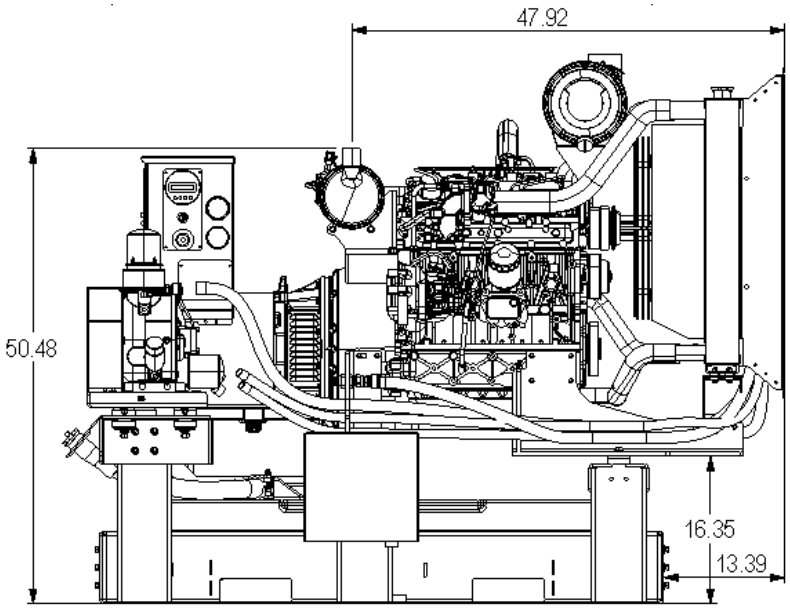

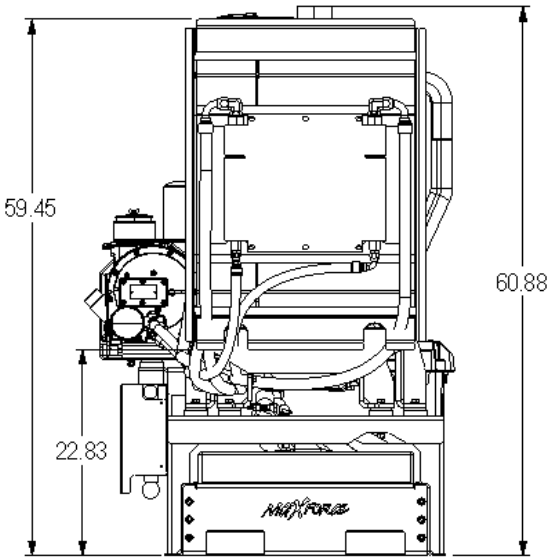

Alternator Wiring—High Voltage

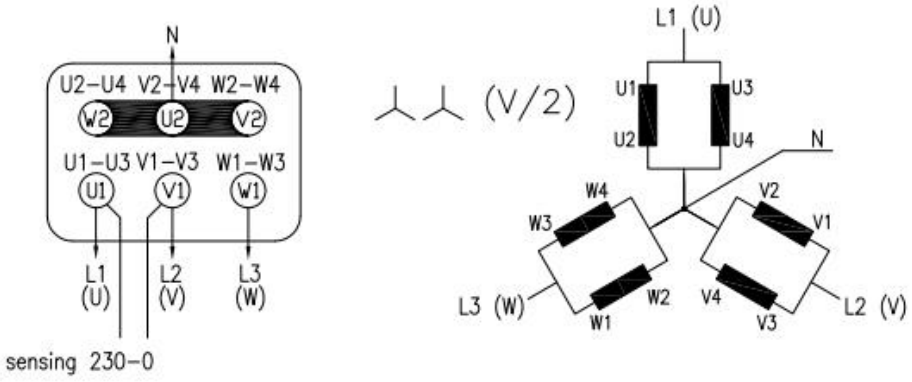

Alternator Wiring—AVR Board

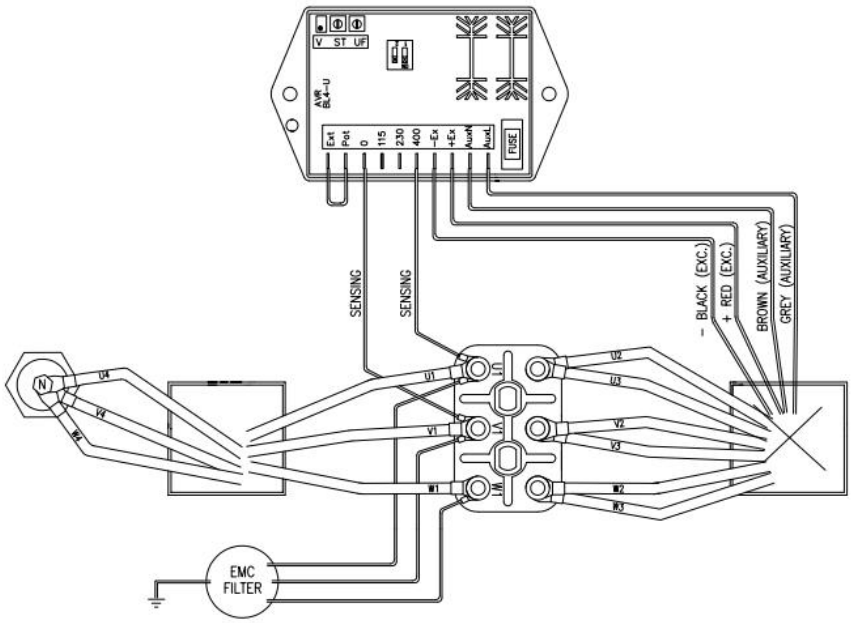

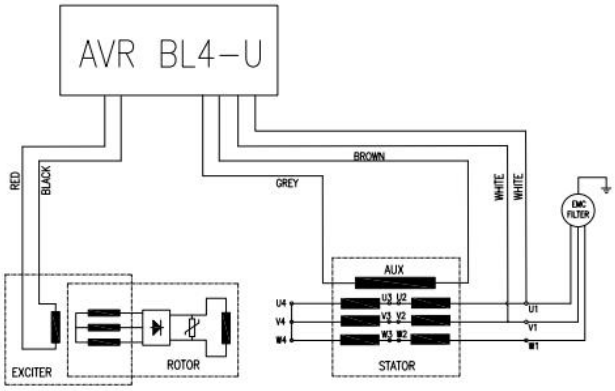

Parts

Frame and Fuel Tank

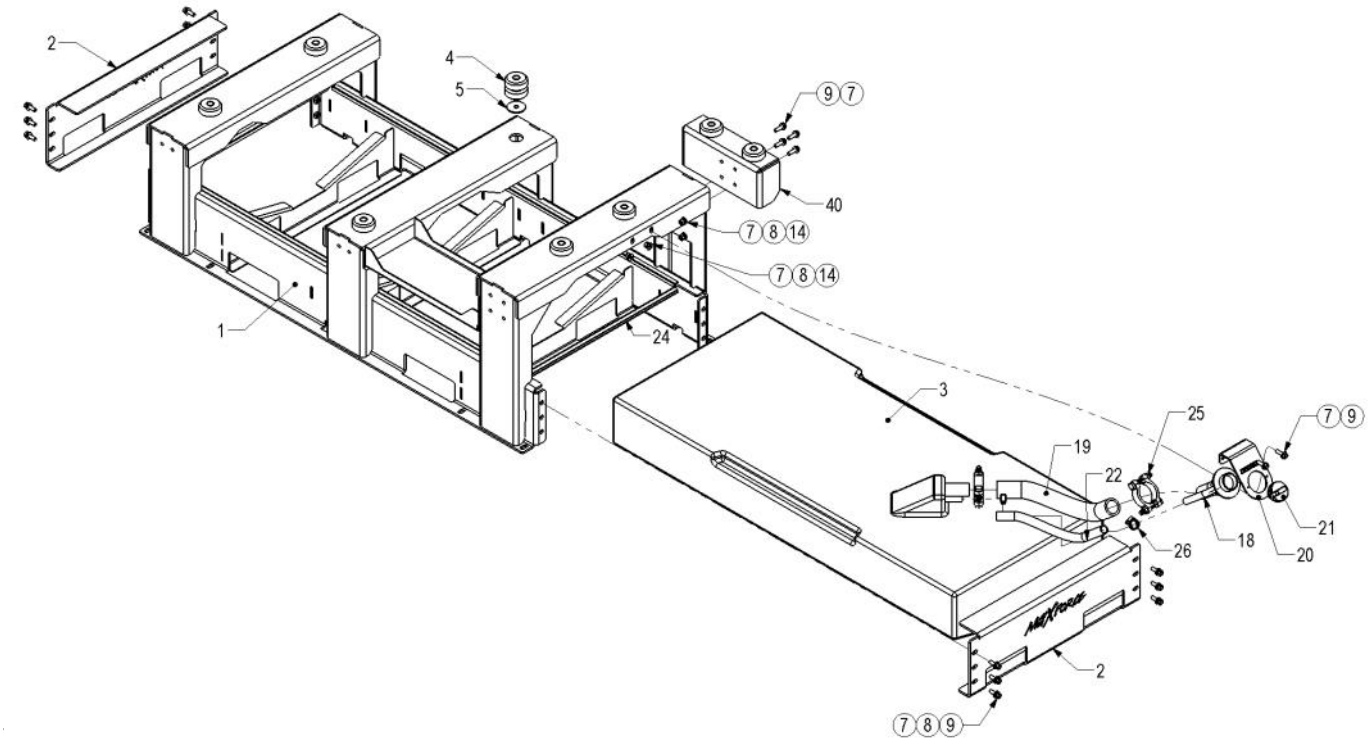

Ref.	Part No.	Description	Qty
1	C90700-70	D34 GENSET FRAME WELDMENT, 40 GAL TANK	1
2	C90700-59	FRAME, END RAIL, MAXFORCE	2
3	V90700-04	DIESEL FUEL TANK, 40 GAL, NATURAL COLOR	1
4	V90700-68	VIBRATION ISOLATOR, SINGLE PT M	8
5	V90700-03	SNUBBING WASHER, VIBRATION ISOLATOR	8
7	V90799-03	FLAT WASHER	44
8	V90799-02	SPLIT LOCK WASHER	34
9	V90799-01	HEX BOLT	34
14	V90799-04	HEX NUT	10
18	V90700-12	FUEL FILLER NECK, DEISEL	1
19	V90726-03_1	FILLER NECK FUEL LINE	1
20	W90700-62	FILLER NECK MOUNT	1
21	V90726-02	FUEL FILLER CAP, DIESEL, GREEN	1
22	V90726-04_1	FILLER NECK VENT LINE	1
24	V90700-08	RUBBER PUSH ON SEAL	1
25	700150	DOUBLE BOLT CLAMP	2
26	WDC#10	#10 HOSE CLAMP	2

Engine, Alternator, Air Compressor

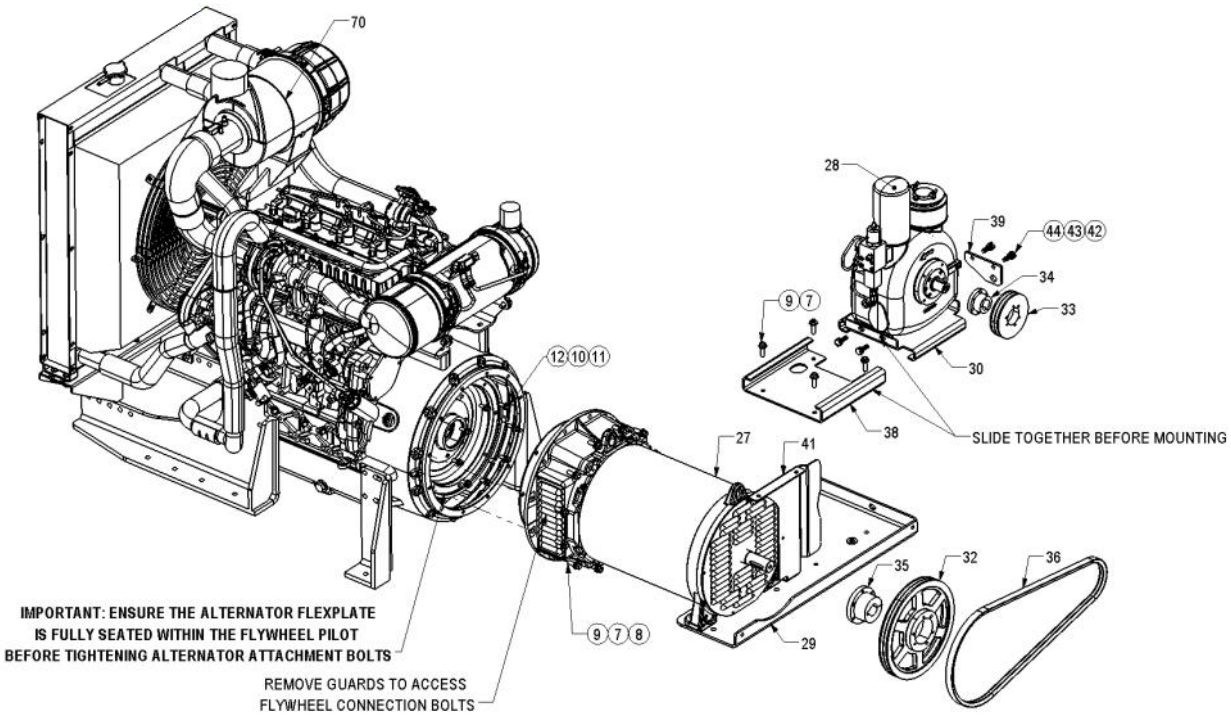

Ref.	Part No.	Description	Qty
7	V90799-03	FLAT WASHER	44
8	V90799-02	SPLIT LOCK WASHER	34
9	V90799-01	HEX BOLT	34
10	V90799-07	FLAT WASHER	8
11	V90799-06	SPLIT LOCK WASHER	8
12	V90799-05	HEX BOLT	8
27	V90700-06	ALTERNATOR	1
28	V90700-20	SCREW AIR COMPRESSOR	1
29	C90700-21	COMPRESSOR MOUNT BASEPLATE	1
30	C90700-25	COMPRESSOR TENSION PLATE SLIDER	1
32	V90700-25	SHEAVE, V-BELT	1
33	V90700-26	SHEAVE, V-BELT	1
34	V90700-28	BUSHING	1
35	V90700-27	BUSHING	1
36	V90700-24	POWERBAND V-BELT	1
38	C90700-24	COMPRESSOR TENSION PLATE BASE	1
39	C90700-29	COMPRESSOR TENSIONER	1
41	C90700-28	BELT GUARD REAR MOUNT	1
42	V90799-17	FLAT WASHER	4
43	V90799-18	SPLIT LOCK WASHER	4
44	V90799-16	HEX BOLT	4
70	V90700-80	ENGINE, DOOSAN D34 DIESEL, TIER IV F	1

Battery & Belt Guard

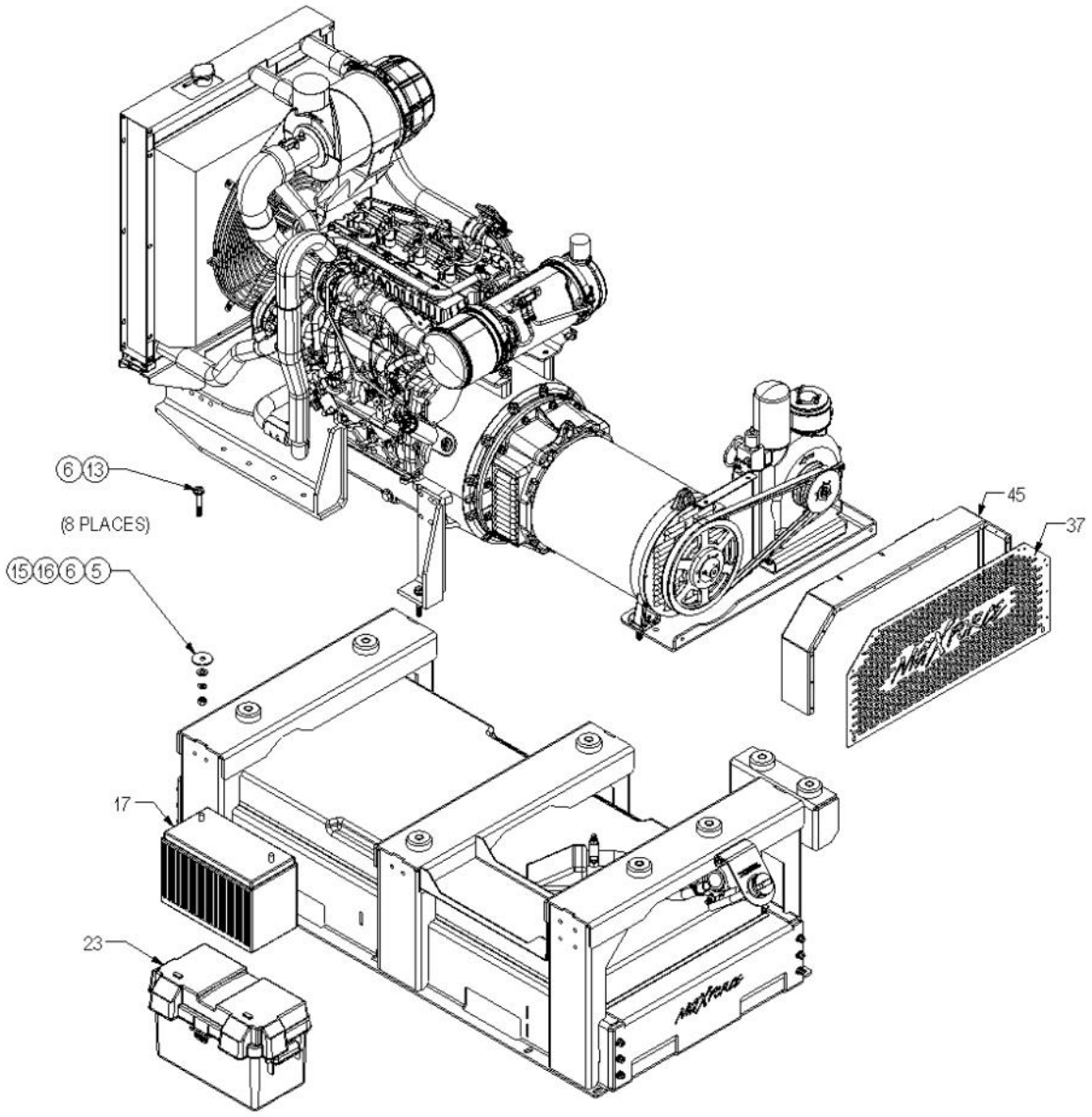

Ref.	Part No.	Description	Qty
5	V90700-03	SNUBBING WASHER, VIBRATION ISOLATOR	8
6	V90799-12	FLAT WASHER	16
13	V90799-09	HEX BOLT	8
15	V90799-11	SPLIT LOCK WASHER	8
16	V90799-13	HEX NUT	8
17	V90700-10	BATTERY	1
23	V90700-11	BATTERY BOX	1
37	C90700-27	BELT GUARD FACEPLATE	1
45	C90700-26	BELT GUARD CENTER	1

Air Compressor Cooler

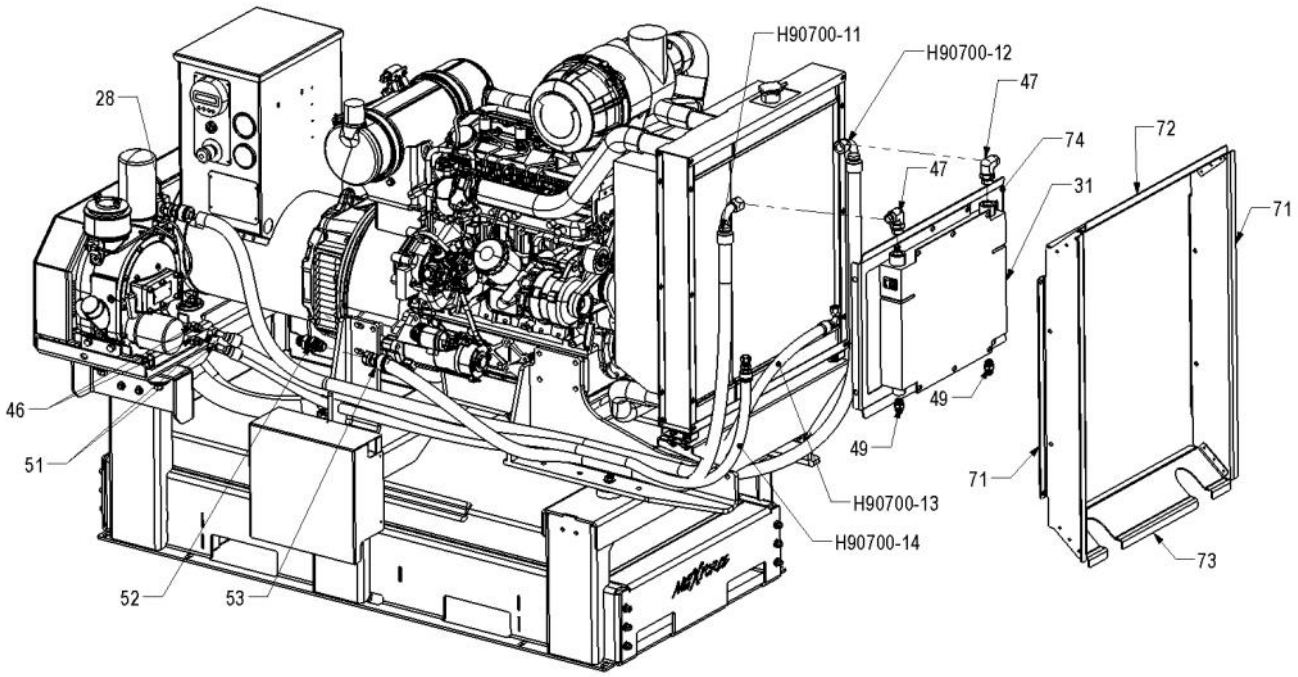

Ref.	Part No.	Description	Qty
31	V90700-21	OIL/AIR COMBINATION COOLER	1
46	HN-08J-06BSPP	HEX NIPPLE	2
47	ME-12J-12BSPP	MALE ELBOW	2
49	HN-08J-08BSPP	HEX NIPPLE	2
52	V90700-29	BULKHEAD	1
71	C90700-66	LOUVER SIDE, D34	2
72	C90700-67	LOUVER TOP, D34	1
73	C90700-68	LOUVER BOTTOM, D34	1
74	C90700-69	LOUVER COOLER MNT, D34	1
	H90700-11	HYD. HOSE ASSM, AIR COOLER TO BULKHEAD	1
	H90700-12	HYD. HOSE ASSM, COMPRESSOR TO AIR COOLER	1
	H90700-13	HYD. HOSE ASSM, COMPRESSOR TO OIL COOLER	1
	H90700-14	HYD. HOSE ASSM, OIL COOLER TO COMPRESSOR	1

Control Box Assembly

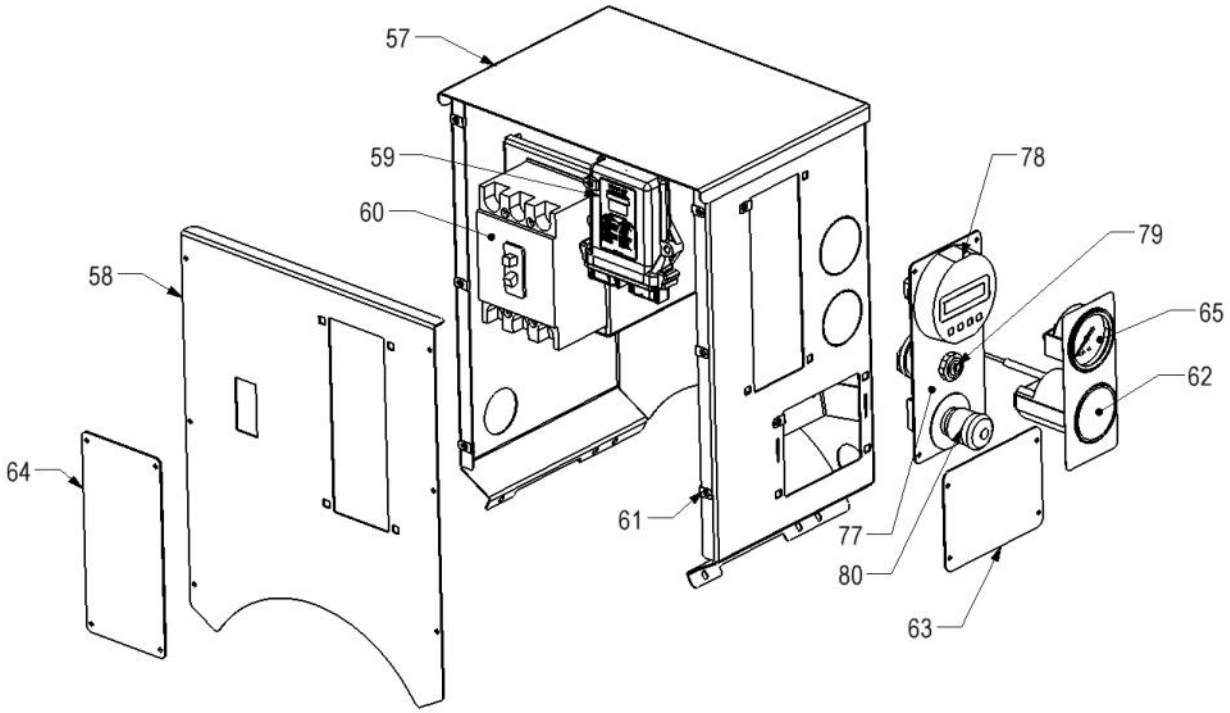

Ref.	Part No.	Description	Qty
57	C90700-34	GENERATOR DISCONNECT PANEL WELDMENT	1
58	C90700-33	GENERATOR DISCONNECT PANEL, FRONT PNL	1
59	XCAN-AC	XCAN MODULE	1
60	CC3125	CIRCUIT BREAKER	1
61	V90700-36	CLIP ON NUT	9
62	V90700-23	TEMPERATURE SHUTDOWN COMBISTAT	1
63	C90700-37	AVR COVER PLATE	1
64	C90700-38	CONTROLS FACEPLATE, BLANK	1
65	PG200252	PRESSURE GAUGE	1
77	C90700-36	CONTROLLER FACEPLATE	1
78		GENERATOR CONTROLLER	1
79		KEY SWITCH	1
80	M22-PVT	EMERGENCY STOP	1

Notes

Notes

Warranty

MaxForce warrants all equipment listed in this manual which is manufactured by MaxForce and bearing its name to be free from defects in material and workmanship on the date of sale by MaxForce or authorized distributor to the original purchaser for use. With the exception of any special extended or limited warranty published by MaxForce, MaxForce will, for a period of twelve months from the date of sale, repair or replace any part of the equipment determined by MaxForce to be defective. This warranty applies only when the equipment is installed, operated and maintained in accordance with MaxForce's written recommendations.

This warranty does not cover, and MaxForce shall not be liable for general wear and tear, or any malfunction, damage or wear caused by faulty installation, misapplication, abrasion, corrosion, inadequate or improper maintenance, accident, tampering, or substitution of non-MaxForce component parts. Nor shall MaxForce be liable for malfunction, damage or wear caused by the incompatibility of equipment with structures, accessories, equipment or materials not supplied by MaxForce, or the improper design, manufacture, installation, operation or maintenance or structures, accessories, equipment or materials not supplied by MaxForce.

This warranty is conditioned upon the prepaid return of the equipment claimed to be defective to an authorized MaxForce distributor for verification of the claimed defect. If the claimed defect is verified, MaxForce will repair or replace free of charge any defective parts. The equipment will be returned to the original purchaser transportation prepaid. If inspection of the equipment does not disclose any defect in material or workmanship, repairs will be made at a reasonable charge, which charges may include the costs of parts, labor and transportation.

MaxForce's sole obligation and buyer's sole remedy for any breach of warranty shall be as set forth above. The buyer agrees that no other remedy (including, but no limited to, incidental or consequential damages for lost profits, lost sales, injury to person or property, or any other incidental or consequential loss) shall be available. Any action for breach of warranty must be brought within two (2) years of the date of sale.

MaxForce makes no warranty, and disclaims all implied warranties of merchantability and fitness for a particular purpose in connection with accessories, equipment, materials or components sold but not manufactured by MaxForce. These items sold, but not manufactured by MaxForce (such as electric motors, gas engines, switches, hose, hydraulic components, etc.) are subject to the warranty, if any, of their manufacturer. MaxForce will provide purchaser with reasonable assistance in making any claim for breach of these warranties.

In no event will MaxForce be liable for indirect, incidental, special or consequential damages resulting from MaxForce supplying equipment hereunder, or the furnishing, performance, or use of any products or other goods sold hereto, whether due to a breach of contract, breach of warranty, the negligence of MaxForce, or otherwise.

All written and visual data contained in this document reflect the latest product information available at the time of publication. MaxForce reserves the right to make changes at any time without notice.